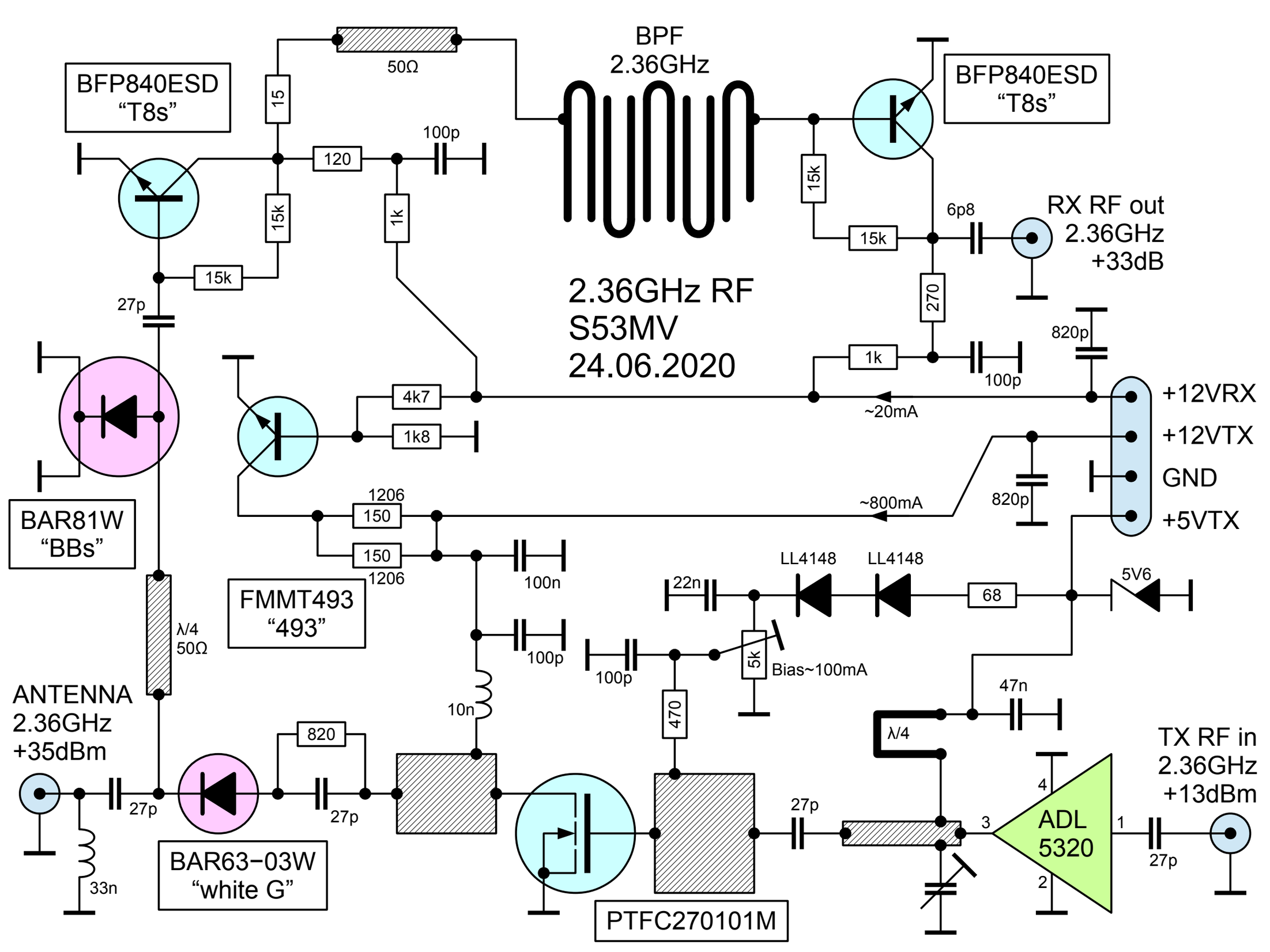
BFP840ESD
"T8s"
50Ω
15
120
100p
15k
1k
15k
27p
BPF
2.36GHz
BFP840ESD
"T8s"
15k
15k
6p8
RX RF out
2.36GHz
+33dB
270
2.36GHz RF
S53MV
24.06.2020
820p
1k
100p
4k7
1k8
~20mA
+12VRX
+12VTX
GND
+5VTX
820p
BAR81W
"BBs"
1206
150
150
1206
~800mA
100n
FMMT493
"493"
22n
LL4148
LL4148
68
5V6
λ/4
50Ω
100p
100p
5k
Bias~100mA
10n
470
47n
λ/4
ANTENNA
2.36GHz
+35dBm
820
27p
27p
27p
33n
BAR63−03W
"white G"
PTFC270101M
27p
ADL
5320
TX RF in
2.36GHz
+13dBm
27p