PLL MAX2870
S53MV
21.06.2020

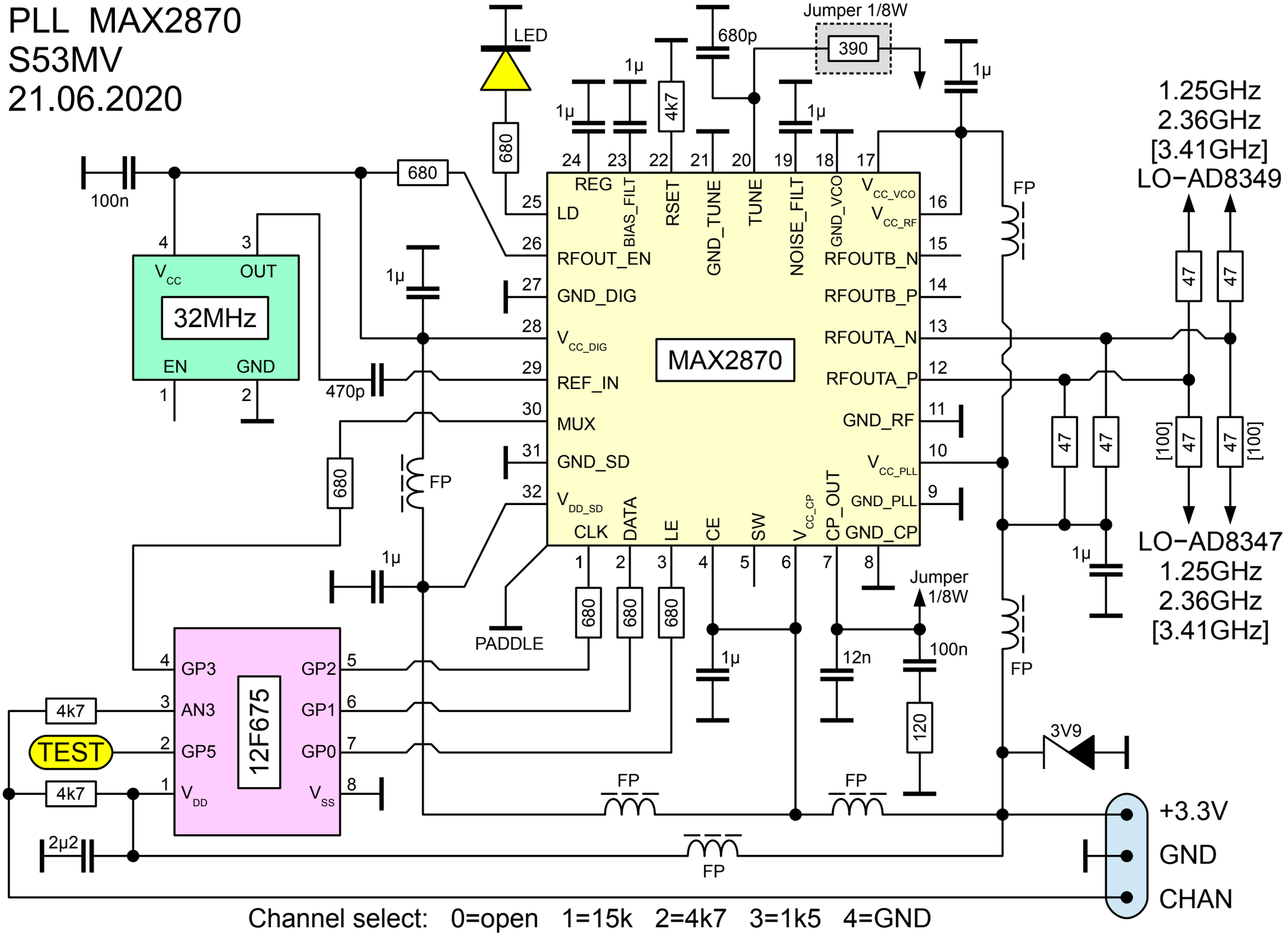

Channel select: 0=open 1=15k 2=4k7 3=1k5 4=GND