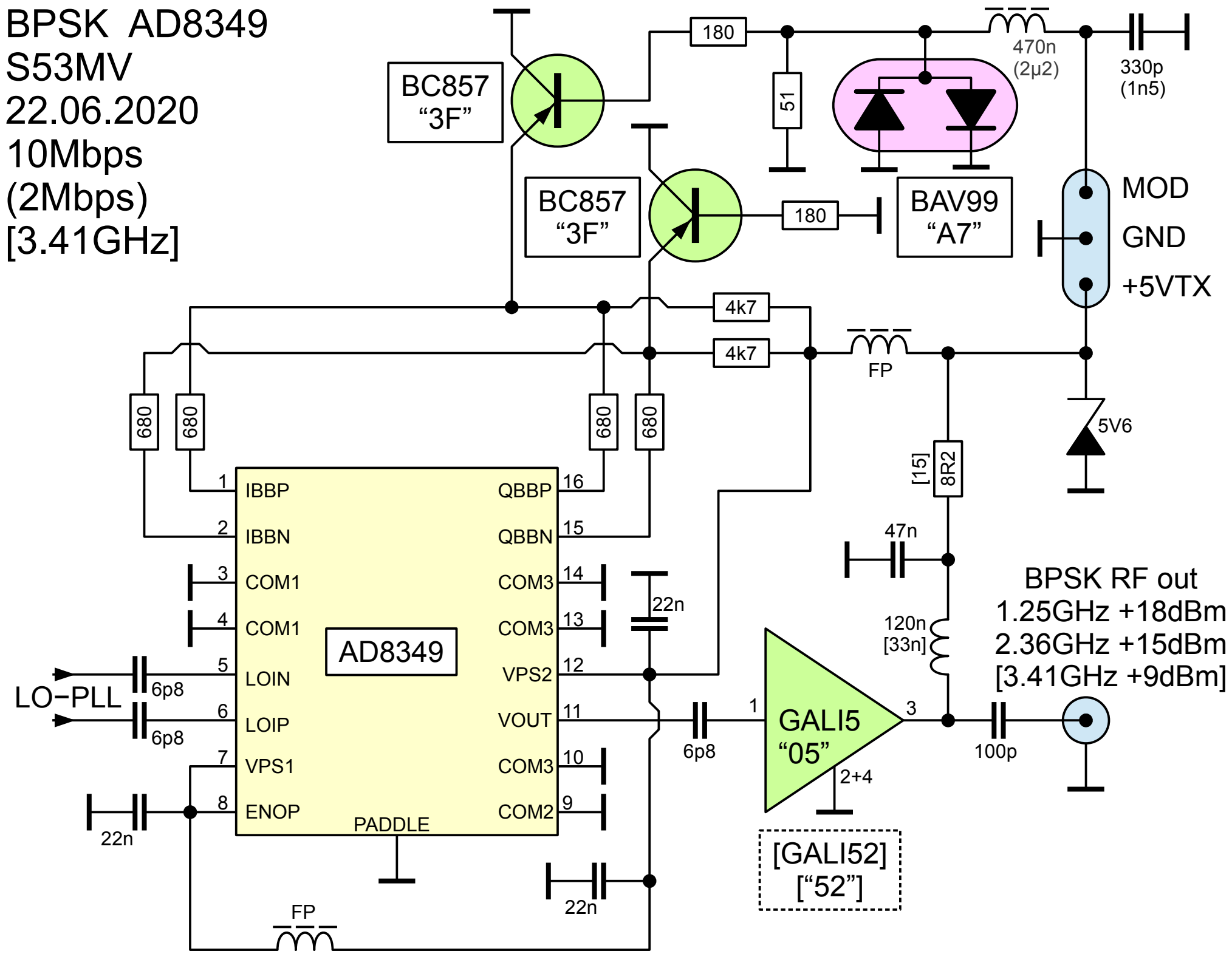
BPSK AD8349
S53MV
22.06.2020
10Mbps
(2Mbps)
[3.41GHz]
BC857
"3F"
BC857
"3F"
180
180
51
470n
(2µ2)
330p
(1n5)
BAV99
"A7"
MOD
GND
+5VTX
4k7
4k7
FP
680
680
680
680
5V6
[15]
8R2
47n
IBBP
IBBN
COM1
COM1
LOIN
LOIP
VPS1
ENOP
QBBP
QBBN
COM3
COM3
VPS2
VOUT
COM3
COM2
AD8349
PADDLE
22n
120n
[33n]
BPSK RF out
1.25GHz +18dBm
2.36GHz +15dBm
[3.41GHz +9dBm]
LO-PLL
6p8
6p8
6p8
GALI5
"05"
2+4
100p
22n
22n
FP
[GALI52]
["52"]