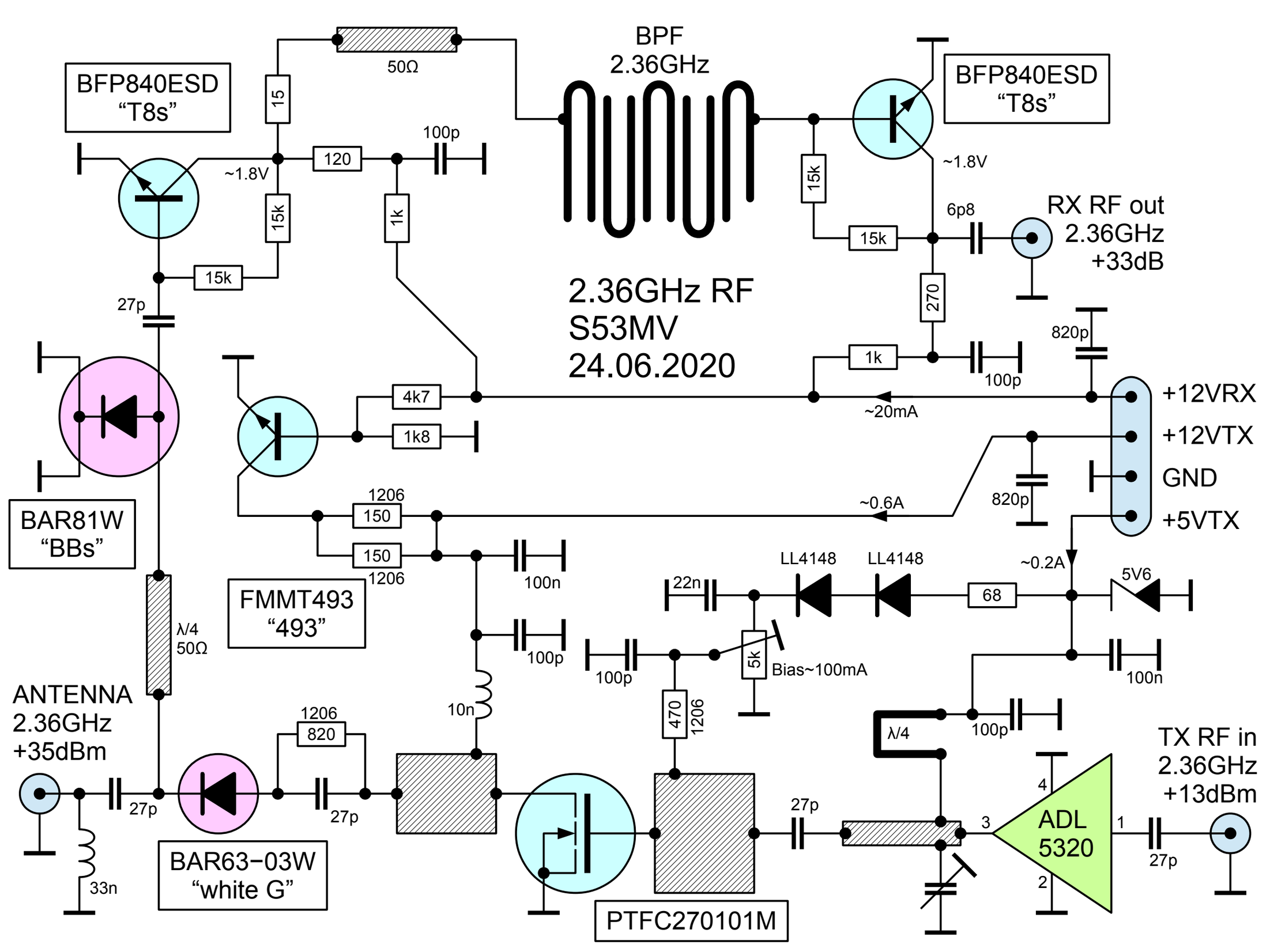
BFP840ESD
"T8s"
50Ω
15
120
100p
~1.8V
15k
1k
27p
15k
BPF
2.36GHz
BFP840ESD
"T8s"
~1.8V
15k
15k
6p8
RX RF out
2.36GHz
+33dB
270
820p
1k
100p
2.36GHz RF
S53MV
24.06.2020
4k7
1k8
~20mA
+12VRX
+12VTX
GND
+5VTX
820p
BAR81W
"BBs"
1206
150
150
1206
~0.6A
100n
FMMT493
"493"
λ/4
50Ω
100p
LL4148
LL4148
22n
68
~0.2A
5V6
5k
Bias~100mA
100p
100n
470
1206
10n
ANTENNA
2.36GHz
+35dBm
1206
820
27p
27p
λ/4
100p
TX RF in
2.36GHz
+13dBm
27p
ADL
5320
4
3
1
2
27p
33n
BAR63−03W
"white G"
PTFC270101M