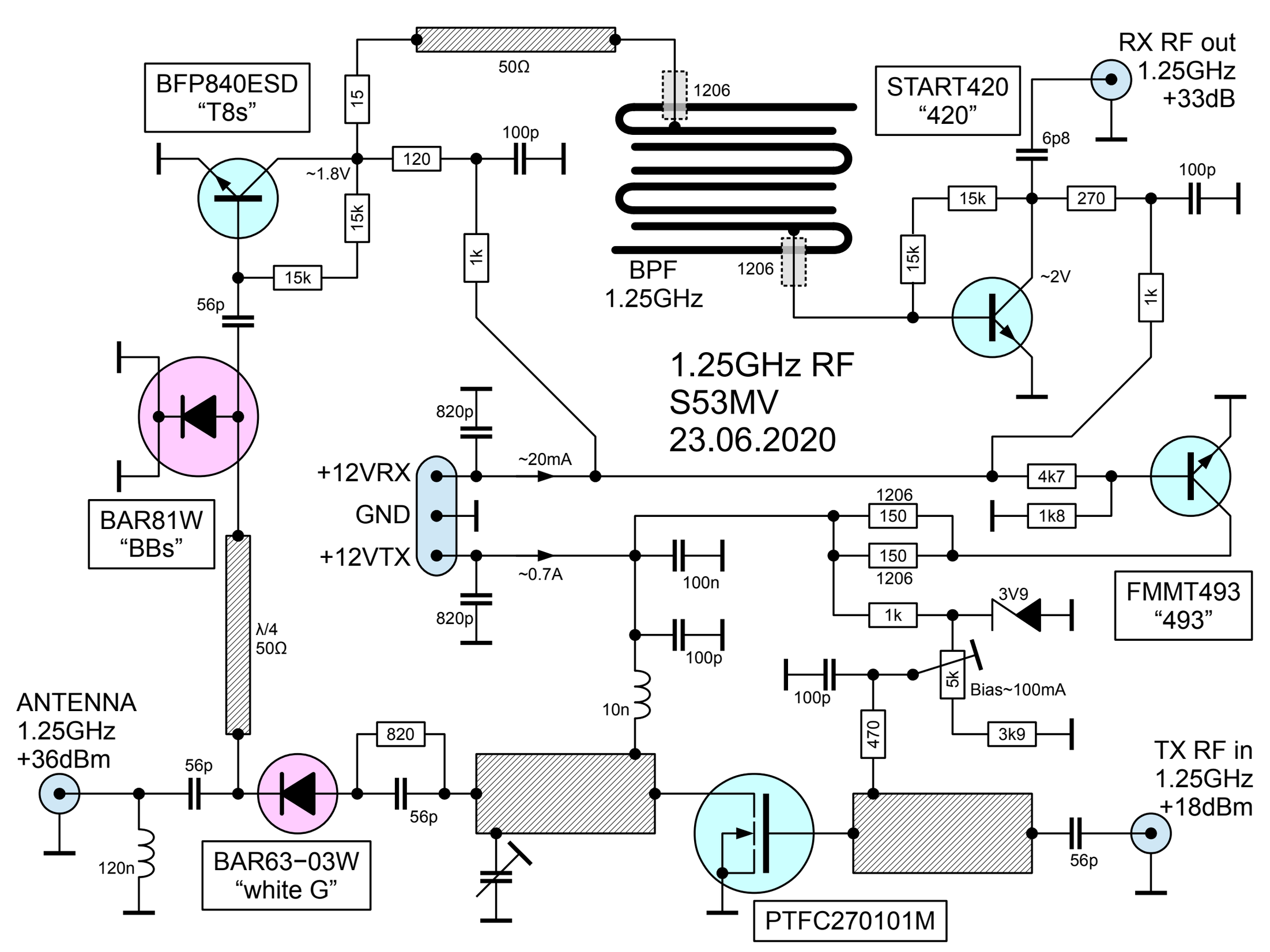
1.25GHz RF
S53MV
23.06.2020
BFP840ESD
"T8s"
START420
"420"
RX RF out
1.25GHz
+33dB
50Ω
1206
BPF
1.25GHz
~1.8V
15
120
100p
15k
1k
56p
6p8
270
~2V
820p
+12VRX
GND
+12VTX
~20mA
~0.7A
4k7
1k8
150
1k
3V9
100n
10n
5k
Bias~100mA
3k9
470
BAR81W
"BBs"
FMMT493
"493"
λ/4
50Ω
ANTENNA
1.25GHz
+36dBm
820
120n
BAR63−03W
"white G"
PTFC270101M
TX RF in
1.25GHz
+18dBm