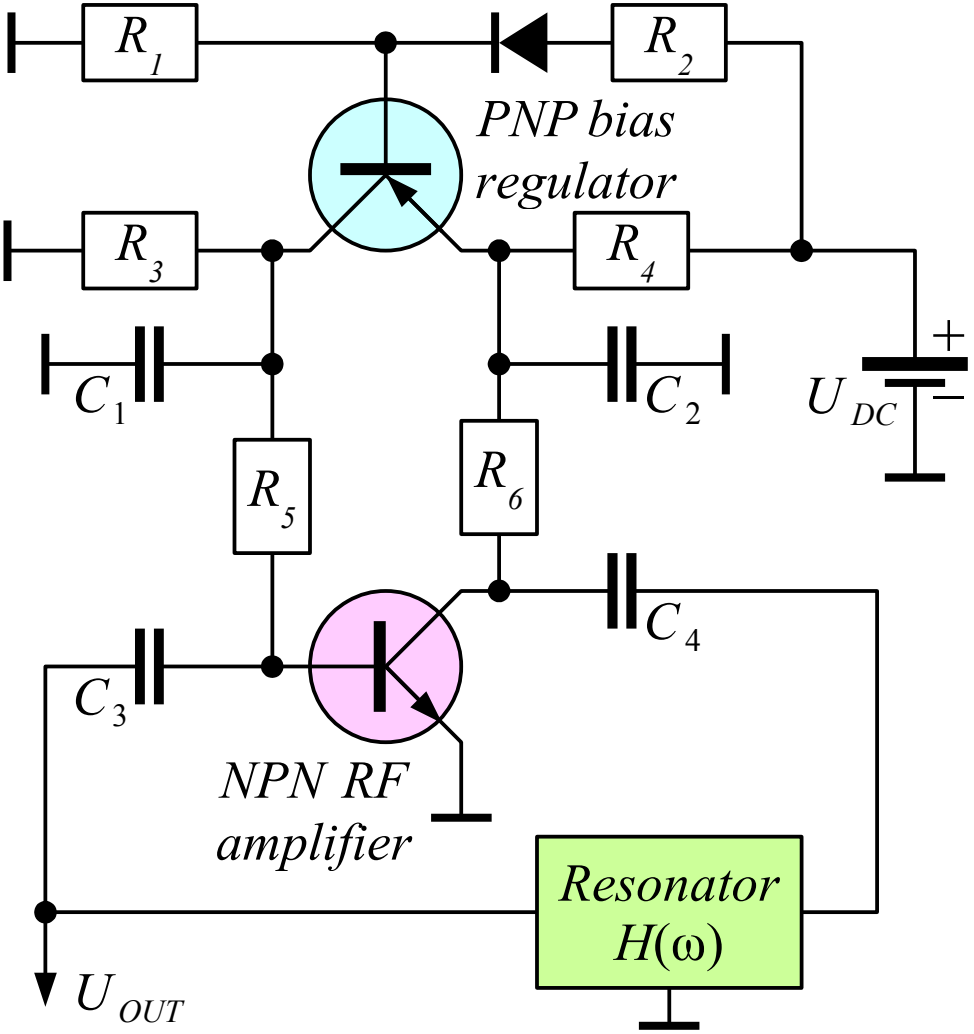
R1
R2
PNP bias
regulator
R3
R4
C1
C2
UDC
+
−
R5
R6
C4
C3
NPN RF
amplifier
Resonator
H(ω)
UOUT